BL-M8733BS2

802.11n 150Mbps WLAN + BT v5.2 Combo SDIO Module Specification

SHENZHEN BILIAN ELECTRONIC CO., LTD

Add: 10~11/F, Building 1A, Huaqiang idea park, Guangming district, Shenzhen. Guangdong, China

Web: www.b-link.net.cn

(Top View)

(Bottom View)

Module Name: BL-M8733BS2	
Module Type: 802.11a/b/g/n 150Mbps WLAN + BT v5.2 Combo SDIO Module	
Revision: V1.0	
Customer Approval:	
Company:	
Title:	
Signature:	Date:
LB-link Approval:	
Title:	
Signature:	Date:

Revision History

Revision	Summary	Release Date
0.1	First release	2023-02-20
1.0	Official release	2023-03-14

1. Introduction

BL-M8733BS2 is a highly integrated Dual-band WLAN + Bluetooth v5.2 Combo module. It combines a 1T1R Dual-band WLAN subsystem with SDIO interface controllers and a Bluetooth subsystem with UART interface controller. This module compatible IEEE802.11a/b/g/n standard and provides the maximum PHY rate up to 150Mbps. It supports Bluetooth dual mode with BT v5.2/v4.2/v2.1 compliant, offering feature-rich and lower cost ideal for OTT boxes, IP cameras, POS and other embedded devices that need wireless connection.

1.1 Features

- Operating Frequencies: 2.4~2.4835GHz or 5.15~5.85GHz
- Host Interface: SDIO 2.0 for WLAN, HS-UART for Bluetooth
- IEEE Standard: IEEE 802.11a/b/g/n
- Wireless PHY rate can reach up to 150Mbps
- Bluetooth Specification: v2.1+EDR/v4.2/v5.2
- Simultaneous BT LE and BR/EDR
- Power Supply: DC 3.3V main power and 1.8V/3.3V I/O power

1.2 Block Diagram

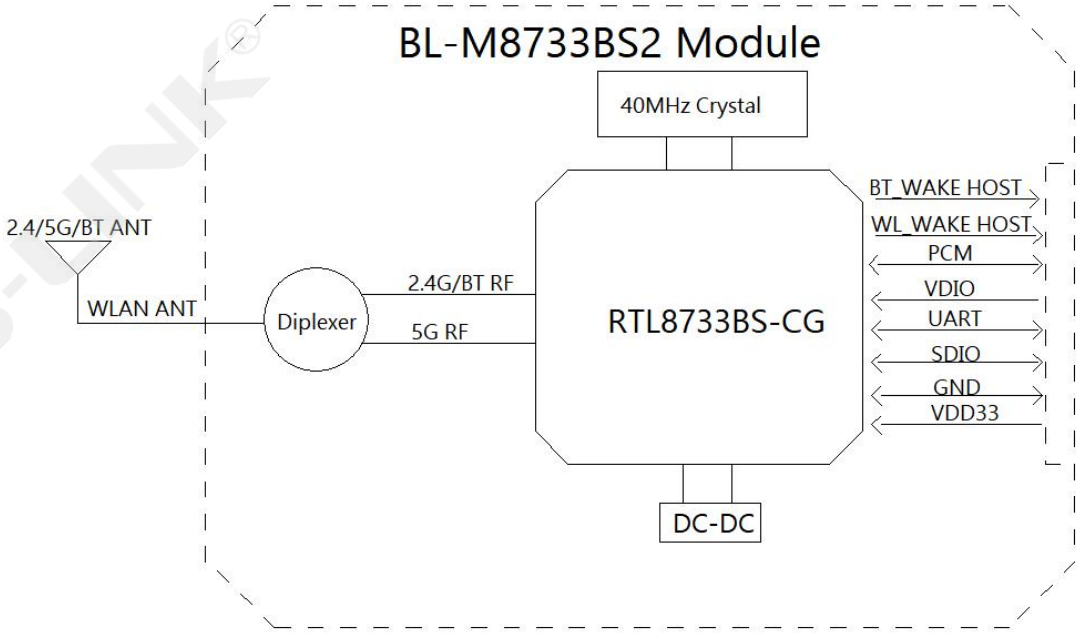

1.3 General Specifications

Module Name	BL-M8733BS2
Chipset	RTL8733BS-CG
WLAN Standards	IEEE802.11 a/b/g/n
Bluetooth Standards	Bluetooth Core Specification v5.2/v4.2/2.1
Host Interface	SDIO 2.0 for WLAN & UART interface for BT
Antenna	Connect to the external antenna through half hole
Dimension	12*12*2.3mm (L*W*H)
Power Supply	DC 3.3V±0.2V @ 600 mA (Max) DC 3.3V±0.2V or 1.8V±0.1V I/O power supply
Operation Temperature	-20℃ to +70℃
Operation Humidity	10% to 95% RH (Non-Condensing)

2. Pin Assignments

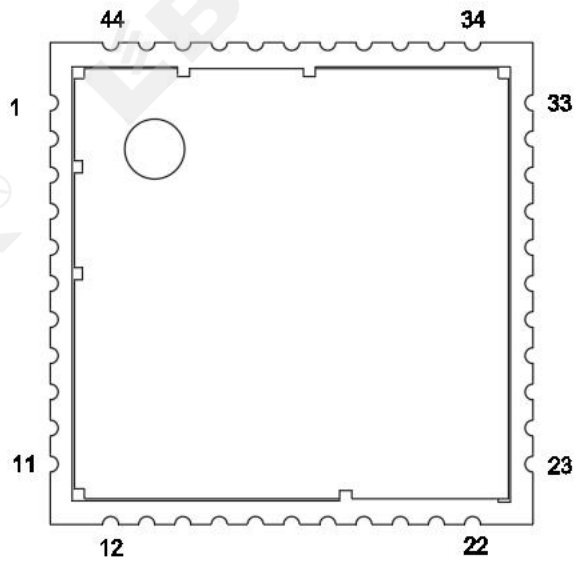

(Top View)

2.1 Pin Definition

No	Pin Name	Type	I/O Level	Description
1	GND	RF		RF Ground connections.
2	WLAN ANT	RF		2.4G / 5G/ BT RF PAD for WLAN_ANT and BT_ANT.
3	GND	RF		RF Ground connections.
4	NC	/		NC
5	NC	/		NC
6	BT_HOST_WAKE	I	VDIO	1. Shared with GPIO11. 2. This pin can be configured as the host wakes up the Bluetooth controller.
7	BT_WAKE_HOST	O	VDIO	1. Shared with GPIO12. 2. This pin is used by BT functions to wake up the host when the remote wake function is enabled. The polarity can be defined by the customer
8	NC	/		NC
9	VDD33	P		DC 3.3V Main power supply.
10	NC	/		NC
11	NC	/		NC
12	WL_DIS#	I	VDIO	1. Shared with GPIO13. 2. This pin can externally shut down WLAN function when WL DIS# is pulled low, and SDIO interface will be also disabled. It can also be configured as the WLAN Radio-off function with host interface remaining connected. There is no pull-up resistor inside the module and high level input is required to enable WLAN function.
13	WL_WAKE_HOST	O	VDIO	1. Shared with GPIO14. 2. This pin is used by WLAN to wake up the host when the remote wake function is enabled. The polarity can be defined by the customer.
14	SD_D2	I/O	VDIO	SDIO data line 2.
15	SD_D3	I/O	VDIO	SDIO data line 3.
16	SD_CMD	I/O	VDIO	SDIO command line.
17	SD_CLK	I	VDIO	SDIO clock line.
18	SD_D0	I/O	VDIO	SDIO data line 0.
19	SD_D1	I/O	VDIO	SDIO data line 1.
20	GND	P		Ground connections.
21	NC	/		NC
22	VDIO	P		1.8V or 3.3V power supply for digital I/O.
23	NC	/		NC

24	SUSCLK_IN	I	VDIO	1. Shared with GPIO4. 2. External 32K or RTC clock input.
25	PCM_OUT	O	VDIO	1. Shared with GPIO1. 2. PCM Data output. 3. Strap Pin, internal pull low by 100K resistor to set internal 1.2V supply "SPS_Mode", the Module enter into "LDO_Mode" (More power consumption) when it pulled high, do not pull High during power on!
26	PCM_CLK	I/O	VDIO	PCM Clock signal, shared with GPIO3.
27	PCM_IN	I	VDIO	1. Shared with GPIO0. 2. PCM data input. 3. Strap Pin, internal pull low to set "Normal operation mode", the Module enter into "Test/Debug mode" (Can't work properly) when it pulled high, do not pull High during power on!
28	PCM_SYNC	I/O	VDIO	1. Shared with GPIO2. 2. PCM sync signal. 3. Strap Pin, internal pull low to set "Internal NV memory mode", the Module enter into "External EPROM mode" (Can't work properly) when it pulled high, do not pull High during power on!
29	NC	/		NC
30	NC	/		NC
31	GND	P		Ground connections.
32	NC	/		NC
33	GND	P		Ground connections.
34	BT_DIS#	I	VDIO	1. Shared with GPIO6. 2. This pin can externally shut down BT function when BT DIS# is pulled Low, and UART interface will be also disabled. It can be also defined as the BT Radio-off function with host interface remaining connected. There is no pull-up resistor inside the module and high level input is required to enable BT function.
35	NC	/		NC
36	GND	P		Ground connections.
37	NC	/		NC
38	NC	/		NC
39	NC	/		NC
40	NC	/		NC
41	GND	P		Ground connections. (This pin has been connected to other GNDs on the module, so it NC or connected to other signals such as UART_CTS in the customer's application

				circuit will not affect normal use)
42	UART_TX	O	VDIO	High-Speed UART Data output.
43	UART_RX	I	VDIO	High-Speed UART Data input.
44	UART_CTS	I	VDIO	High-Speed UART CTS input.

P: Power, I: Input, O: Output, I/O: In/Output, RF: Analog RF Port

3. Electrical and Thermal Specifications

3.1 Recommended Operating Conditions

Parameters		Min	Typ	Max	Units
Ambient Operating Temperature		-20	25	70	℃
External Antenna VSWR			1.7	2.0	/
Supply Voltage	VDD33	3.1	3.3	3.5	V
	VDIO	1.62	1.8	1.98	V
		3.1	3.3	3.5	V

3.2 Digital 3.3V I/O DC Specifications

Symbol	Parameter	Min	Typ	Max	Units
VIH	Input High Voltage	2.0	3.3	3.5	V
VIL	Input Low Voltage	--	0	0.5	V
VOH	Output High Voltage	2.97	3.3	3.5	V
VOL	Output Low Voltage	0	--	0.33	V

3.3 Digital 1.8V I/O DC Specifications

Symbol	Parameter	Min	Typ	Max	Units
VIH	Input High Voltage	1.3	1.8	2.0	V
VIL	Input Low Voltage	--	0	0.3	V
VOH	Output High Voltage	1.62	--	1.98	V
VOL	Output Low Voltage	0	--	0.18	V

3.4 Current Consumption

Conditions : VDD33=3.3V ,VDIO=3.3V ; Ta:25℃			
Use Case	VDD33 Current		
	Typ (IRMS)	Max (IPeak)	Units
2.4G WLAN TRX Throughput (Linux Driver)	151	290	mA
5G WLAN TRX Throughput (Linux Driver)	130	290	mA
2.4G 11b@1Mbps TX@20dBm (RF-Test)	380	460	mA
2.4G 11b@11Mbps TX@20dBm (RF-Test)	388	460	mA
2.4G 11g@6Mbps TX@20dBm (RF-Test)	303	380	mA
2.4G 11g@54Mbps TX@19dBm (RF-Test)	178	360	mA
2.4G 11n@HT20_MCS0 TX@20dBm (RF-Test)	283	360	mA
2.4G 11n@HT20_MCS7 TX@18dBm (RF-Test)	174	360	mA
2.4G 11n@HT40_MCS0 TX@20dBm (RF-Test)	260	380	mA
2.4G 11n@HT40_MCS7 TX@18dBm (RF-Test)	153	350	mA
2.4G 11n@HT40_MCS0 RX (RF-Test)	73	84	mA
2.4G 11n@HT40_MCS7 RX (RF-Test)	74	84	mA
5G 11a@6Mbps TX@19dBm (RF-Test)	414	520	mA
5G 11a@54Mbps TX@17dBm (RF-Test)	252	520	mA
5G 11n@HT20_MCS0 TX@18dBm (RF-Test)	377	490	mA
5G 11n@HT20_MCS7 TX@16dBm (RF-Test)	230	490	mA
5G 11n@HT40_MCS0 TX@18dBm (RF-Test)	339	490	mA
5G 11n@HT40_MCS7 TX@16dBm (RF-Test)	189	490	mA
5G 11n@HT40_MCS0 RX (RF-Test)	71	84	mA
5G 11n@HT40_MCS7 RX (RF-Test)	73	86	mA
BT			
BR_1M TX@5dBm (RF-Test)	85	120	mA
EDR_2M TX@5dBm (RF-Test)	95	120	mA
EDR_3M TX@5dBm (RF-Test)	98	120	mA
EDR_3M RX (RF-Test)	86	105	mA
LE_1M TX@5dBm (RF-Test)	100	130	mA
LE_2M TX@5dBm (RF-Test)	88	120	mA
LE_2M RX (RF-Test)	85	105	mA

4. WLAN&BT RF Specifications

4.1 2.4G WLAN RF Specification

Conditions : VDD33=3.3V ; Ta:25℃	
Features	**Description**
WLAN Standard	IEEE 802.11b/g/n
Frequency Range	2.4~2.4835GHz (2.4GHz ISM Band)
Channels	Ch1~Ch13 (For 20MHz Channels)
Modulation	802.11b (DSSS): CCK, DQPSK, DBPSK; 802.11g (OFDM): BPSK, QPSK, QAM16, QAM64; 802.11n (OFDM): BPSK, QPSK, QAM16, QAM64;
Data Rate	802.11b: 1, 2, 5.5, 11Mbps; 802.11g: 6, 9, 12, 18, 24, 36, 48, 54Mbps; 802.11n (HT20): MCS0~MCS7 6.5~72.2Mbps; 802.11n (HT40): MCS0~MCS7 13.5~150Mbps;
Frequency Tolerance	≦±20ppm

2.4G Transmitter Specifications (TX power tolerance calibrated, customers can define the target TX power by modifying configuration file of the driver software. Customers must define the TX power same or lower than recommended Target TX Power as below)			
TX Rate	**Recommended Target TX Power (dBm)**	**TX Power Tolerance (dBm)**	**EVM (dB)**
802.11b@1~11Mbps	20	±2	≦-10
802.11g@6Mbps	20	±2	≦-10
802.11g@54Mbps	19	±2	≦-25
802.11n@HT20_MCS0	20	±2	≦-10
802.11n@HT20_MCS7	18	±2	≦-28
802.11n@HT40_MCS0	20	±2	≦-10
802.11n@HT40_MCS7	18	±2	≦-28
2.4G Receiver Specifications			
RX Rate	**Min Input Level (Typ)**	**Max Input Level (Typ)**	**PER**
802.11b@1Mbps	-95 dBm	-10 dBm	< 8%
802.11b@11Mbps	-87 dBm	-10 dBm	< 8%

802.11g@6Mbps	-90 dBm	-10 dBm	< 10%
802.11g@54Mbps	-74 dBm	-10 dBm	< 10%
802.11n@HT20_MCS0	-89 dBm	-10 dBm	< 10%
802.11n@HT20_MCS7	-72 dBm	-10 dBm	< 10%
802.11n@HT40_MCS0	-87 dBm	-10 dBm	< 10%
802.11n@HT40_MCS7	-70 dBm	-10 dBm	< 10%

4.2 5G WLAN RF Specification

Conditions : VDD33=3.3V ; Ta:25℃	
Features	**Description**
WLAN Standard	IEEE 802.11a/n
Frequency Range	5.15~5.25GHz; 5.25~5.35GHz; 5.47~5.73GHz; 5.735~5.835GHz(5GHz ISM Band)
Channels	Ch36, Ch40, Ch44, Ch48; Ch52~Ch64; Ch100~Ch140; Ch149~Ch165 (For 20MHz Channels)
Modulation	802.11a (OFDM): BPSK, QPSK, QAM16, QAM64; 802.11n (OFDM): BPSK, QPSK, QAM16, QAM64;
Data Rate	802.11a: 6, 9, 12, 18, 24, 36, 48, 54Mbps; 802.11n (HT20): MCS0~MCS7 6.5~72.2Mbps; 802.11n (HT40): MCS0~MCS7 13.5~150Mbps;
Frequency Tolerance	≦ ±20ppm

5G Transmitter Specifications (TX power tolerance calibrated, customers can define the target TX power by modifying configuration file of the driver software. Customers must define the TX power same or lower than recommended Target TX Power as below)

TX Rate	Recommended Target TX Power (dBm)	TX Power Tolerance (dBm)	EVM (dB)
802.11a@6Mbps	19	±2	≦-10
802.11a@54Mbps	17	±2	≦-25
802.11n@HT20_MCS0	18	±2	≦-10
802.11n@HT20_MCS7	16	±2	≦-28
802.11n@HT40_MCS0	18	±2	≦-10

802.11n@HT40_MCS7	16	±2	≦-28
5G Receiver Specifications			
RX Rate	**Min Input Level (Typ)**	**Max Input Level (Typ)**	**PER**
802.11a@6Mbps	-92 dBm	-10 dBm	< 10%
802.11a@54Mbps	-74 dBm	-10 dBm	< 10%
802.11n@HT20_MCS0	-90 dBm	-10 dBm	< 10%
802.11n@HT20_MCS7	-72 dBm	-10 dBm	< 10%
802.11n@HT40_MCS0	-89 dBm	-10 dBm	< 10%
802.11n@HT40_MCS7	-70 dBm	-10 dBm	< 10%

4.3 Bluetooth RF Specification

Conditions: VDD33=3.3V; Ta:25℃	
Features	**Description**
Bluetooth Specification	Bluetooth v2.1+EDR/v4.2/v5.2
Frequency Range	2.4~2.4835GHz (2.4GHz ISM Band)
Channels	Bluetooth Classic: Ch0~Ch78 (For 1MHz Channels); Bluetooth Low Energy: Ch0~Ch39 (For 2MHz Channels);
Power Classes	Bluetooth Classic: Class1; Bluetooth Low Energy: Class1.5;
Data Rate & Modulation	BR_1Mbps: GFSK; EDR_2Mbps: π/4-DQPSK; EDR_3Mbps: 8DPSK; LE_1Mbps: GFSK (Uncoded); LE_2Mbps: GFSK (Uncoded);

Bluetooth Transmitter Specifications			
Items	**Min (dBm)**	**Typ (dBm)**	**Max (dBm)**
TX Power			
BR_1M	2	5	8
EDR_2M	2	5	8
EDR_3M	2	5	8
LE_125K/500K	2	5	8
LE_1M	2	5	8

LE_2M	2	5	8
Items	**Min**	**Typ**	**Max**
BR_1M (DH1) Modulation Characteristics			
Δf1avg	140KHz	165.2KHz	175KHz
Δf2avg	115KHz	152.6KHz	175KHz
Δf2max	115KHz	158.6KHz	/
Δf2avg/Δf1avg	0.8	0.92	/
Items	**Min**	**Typ**	**Max**
EDR_3M(3DH5) EDR Carrier Frequency Stability and Modulation Accuracy			
ωi	-75KHz	27.5KHz	+75KHz
ωi+ωo	-75KHz	28.1KHz	+75KHz
ωo	-10KHz	0.57KHz	+10KHz
8DPSK RMS DEVM	/	0.043	0.13
8DPSK Peak DEVM	/	0.095	0.25
Items	**Min**	**Typ**	**Max**
LE_1M Modulation Characteristics			
Δf1avg	225KHz	253.53KHz	275KHz
Δf2avg	185KHz	228.34KHz	275KHz
Δf2max	185KHz	225.71KHz	275KHz
Δf2avg/Δf1avg	0.8	0.9	2

Bluetooth Receiver Specifications

Items	Sensitivity		Maximum Input Level	
	Input Level (Typ)	BER	Input Level (Typ)	BER
BR_1M	-90 dBm	≦ 0.1%	-5 dBm	≦ 0.1%
EDR_2M	-88 dBm	≦ 0.01%	-5 dBm	≦ 0.1%
EDR_3M	-85 dBm	≦ 0.01%	-5 dBm	≦ 0.1%
Items	**Input Level (Typ)**	**PER**	**Input Level (Typ)**	**PER**
LE_125K/500K	-92 dBm	≦ 5%	-5 dBm	≦ 5%
LE_1M	-90 dBm	≦ 5%	-5 dBm	≦ 5%
LE_2M	-84 dBm	≦ 5%	-5 dBm	≦ 5%

5. Mechanical Specifications

5.1 Module Outline Drawing

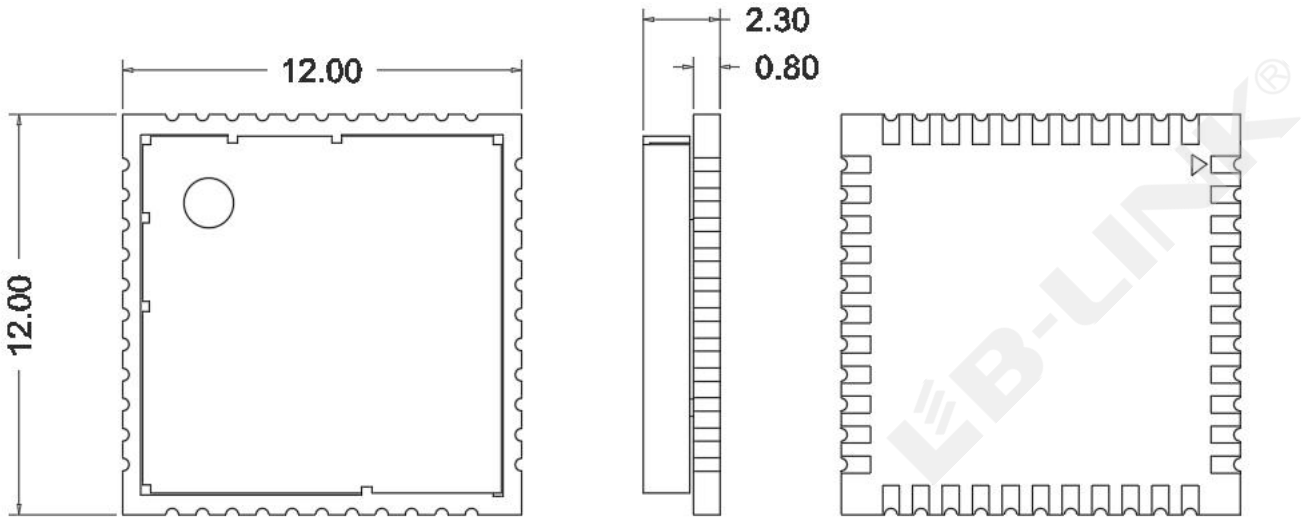

(Top View) (Side View) (Bottom View)

Module dimension: 12*12*2.3mm (L*W*H; Tolerance: ±0.15mm)

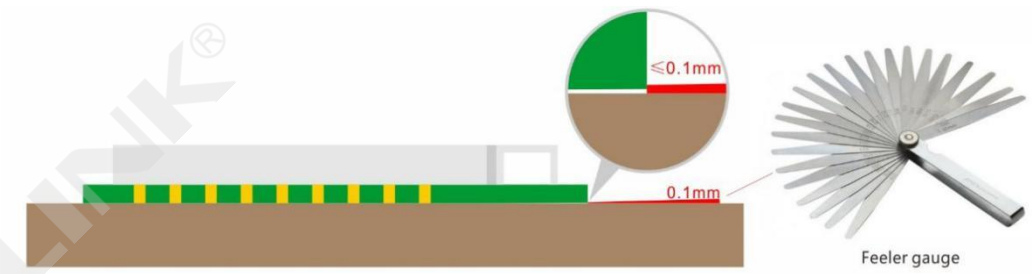

Module Bow and Twist: ≤0.1mm

5.2 Mechanical Dimensions

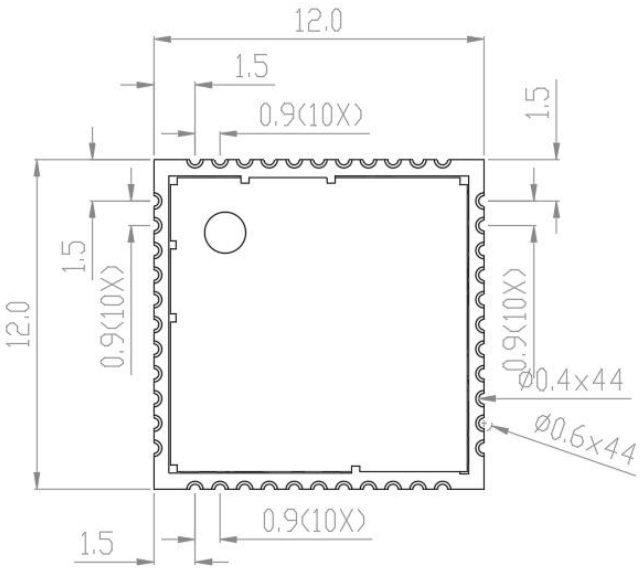

(Top View)

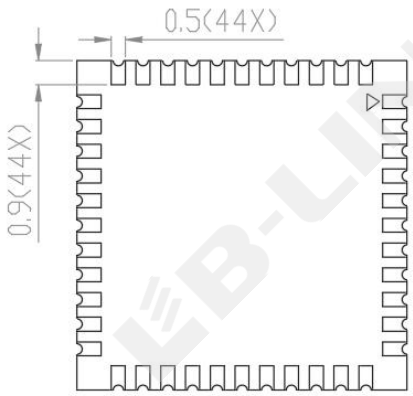

(Bottom View)

6. Application Information

6.1 Typical Application Circuit

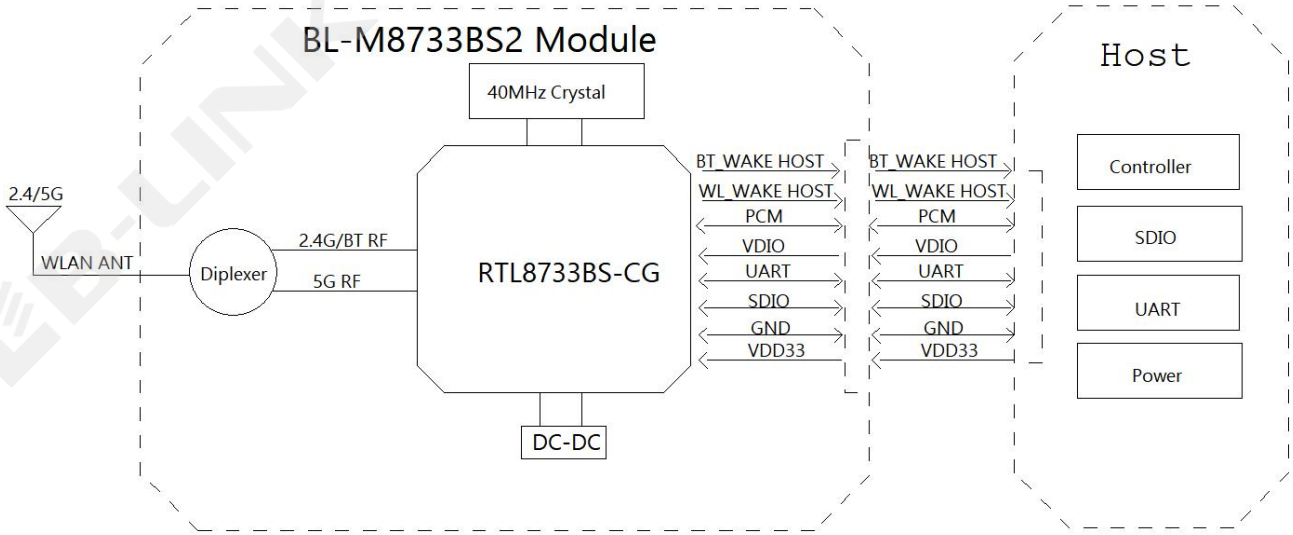

6.2 Recommend PCB Layout Footprint

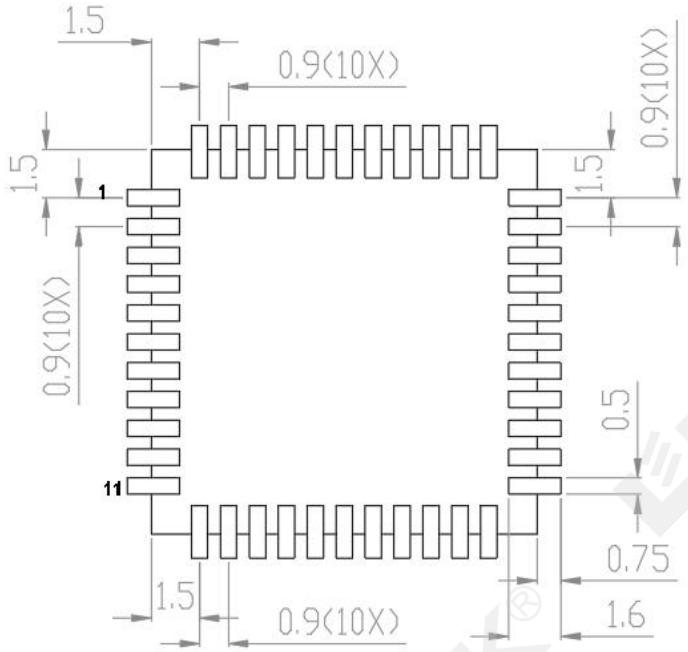

(Design Unit: mm)

6.3 Reflow Soldering Standard Conditions

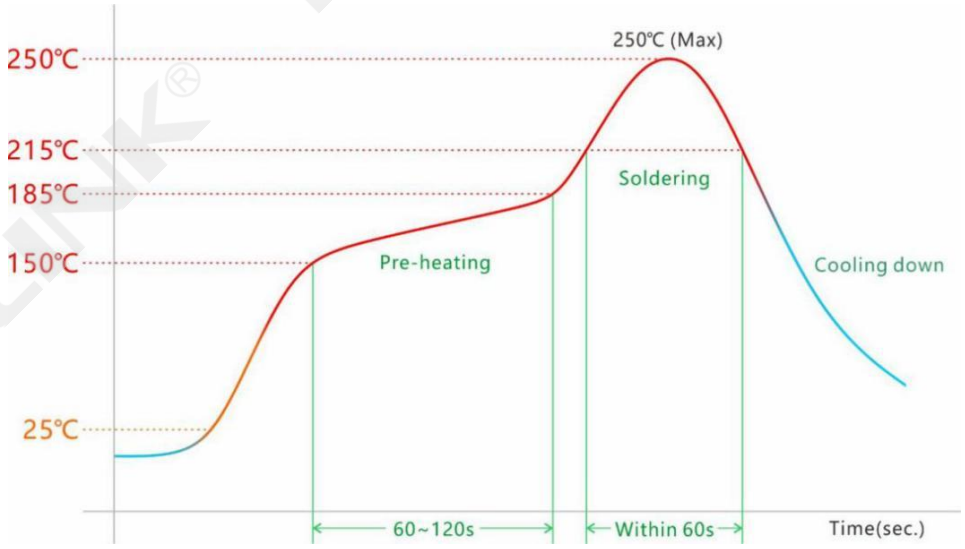

Please use the reflow within 2 times.
Set up the highest temperature within 250℃.

7. Key Components Of Module

No.	Parts	Specification	Manufacturer	Note
1	Chipset	RTL8733BS-CG	Realtek Semiconductor Corp.	
2	PCB	BL-M8733BS2	Shenzhen Tie Fa Technology Limited	
			MILLION SOURCE PRINTED CIRCUIT BOARD CO.,LTD	
			SHEN ZHEN QILI ELECTRON CO.,LTD	
3	Crystal	40MHz-2016	JinHua East Crystal Electronic Co.,Ltd	
			LUCKI CM ELECTRONICS CO.,LTD	
			Chengde oscillator Electronic Technology CO.,LTD	
4	Diplexer	DIP1608	Walsin Technology Corporation	
			Advanced Ceramic X Corp.	
			Dongguan Hekang Electronics Co.,LTD	

8. Package and Storage Information

8.1 Package Dimensions

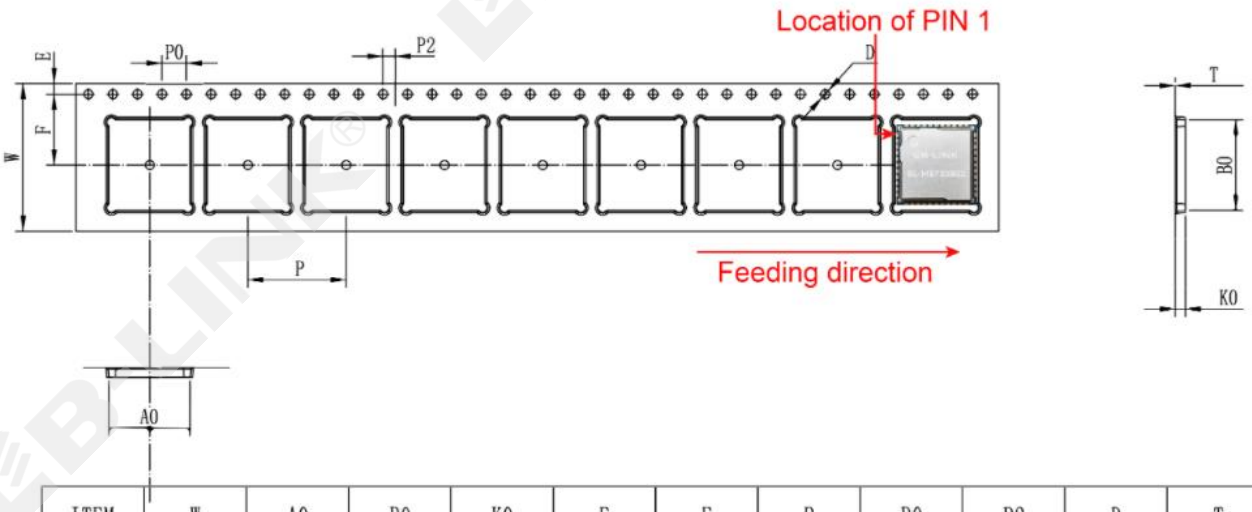

ITEM	W	A0	B0	K0	E	F	P	P0	P2	D	T
DIM	24.00+0.3	12.50±0.1	12.50±0.1	2.40±0.1	1.75±0.1	11.5±0.1	20.00±0.1	4.00±0.1	2.00±0.1	Ø1.5±0.1	0.30±0.05

Package specification:

1. 1,000 modules per roll and 5,000 modules per box.
2. Outer box size: 37.5*36*29cm.
3. The diameter of the blue environment-friendly rubber plate is 13 inches, with a total thickness of 28mm (with a width of 24mm carrying belt).
4. Put 1 package of dry agent (20g) and humidity card in each anti-static vacuum bag.
5. Each carton is packed with 5 boxes.

8.2 Storage Conditions

Absolute Maximum Ratings:

Storage temperature: -40℃ to +85℃

Storage humidity: 10% to 95% RH（Non-Condensing）

Recommended Storage Conditions:

Storage temperature: 5℃ to +40℃

Storage humidity: 20% to 90% RH

Please use this Module within 12month after vacuum-packaged.

The Module shall be stored without opening the packing.

After the packing opened, the Module shall be used within 72hours.

When the color of the humidity indicator in the packing changed,

the Module shall be baked before soldering.

Baking condition: 60℃, 24hours, 1time.

ESD Sensitivity：

ESD Protection: 2KV(HBM, Maximum rating)

The Module is a static-sensitive electronic device.

Do not operate or store near strong electrostatic fields.

Take proper ESD precautions!

ESD CAUTION